SYSTEM INFORMATION

Model: SANGEL SL30

Lighting unit dimensions	Length	Width	Height
	32.28”	16.14”	11.61”
	820mm	410mm	295mm

Pole dimensions	Inner	Outer
	2.60”	3.03”
	66mm	77mm

Unit: millimetres

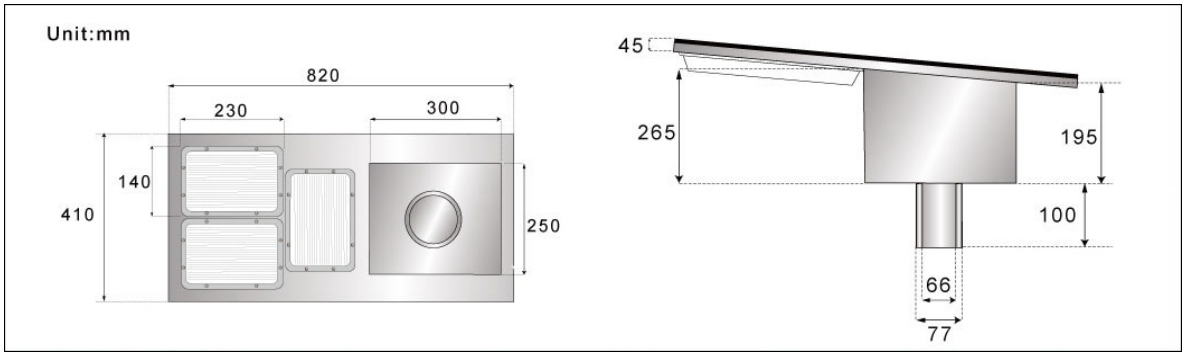

Solar panel type	Mono-Crystalline panel
Solar panel voltage	17.4v
Solar panel output	45W
Battery type	Lead-acid
Battery voltage/current	12v DC, 50AH
Battery charge time	6 to 8 hours (weather dependent)
Operating time (per full charge)	Up to 3 nights
Lighting On/Off modes	Auto – night and day time detection to turn on/off unit
Illumination technology	180 small high brightness, wide angle LEDs. White or Yellow.
Body coating	Zinc coated steel plates
Unit weight	Net: 85lbs/38kg Gross: 97lbs/44kg
Quality rating	IP65